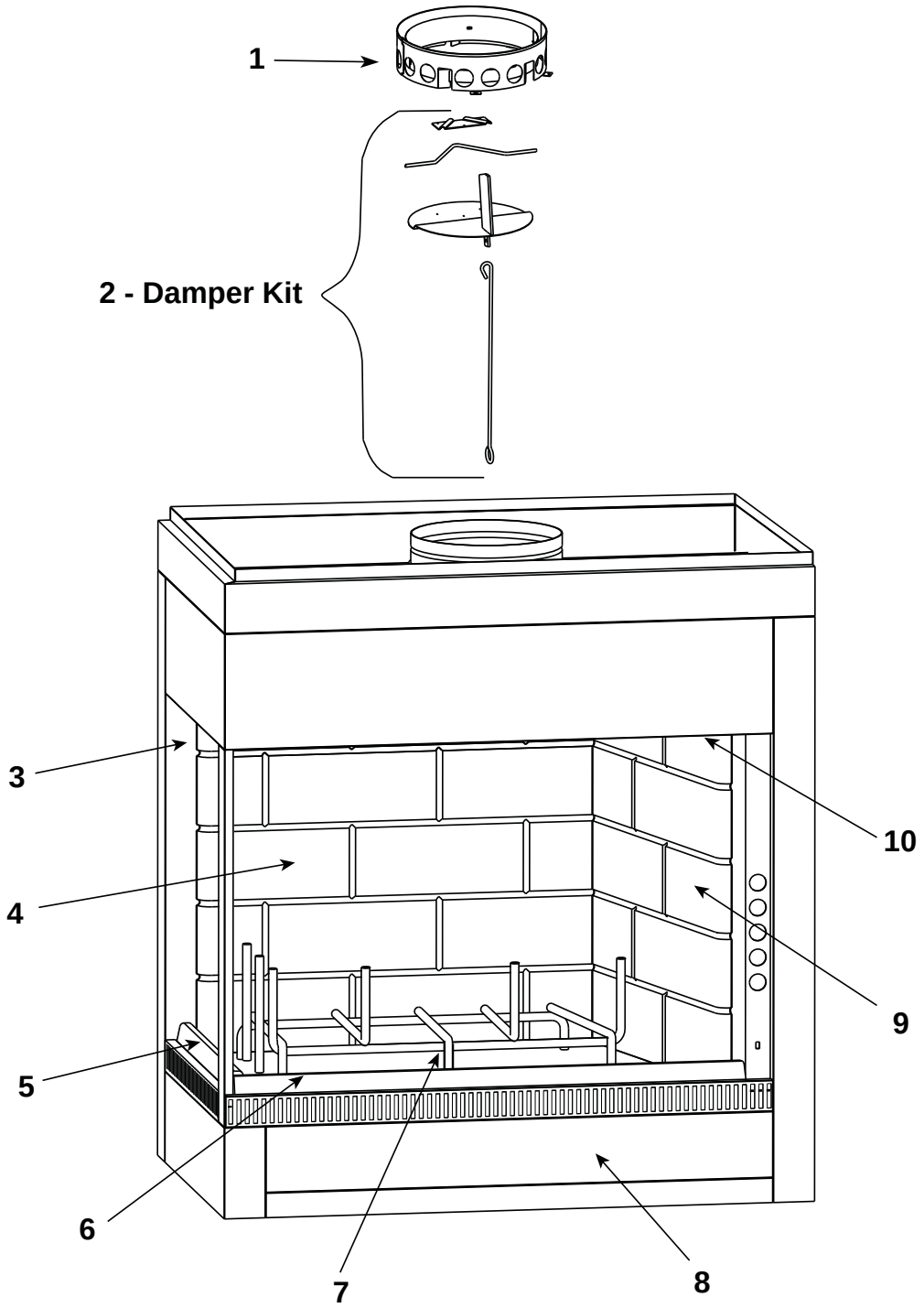

Part numbers on following page.

heatilator®
The first name in fireplaces

Service Parts

CL36D

Beginning Manufacturing Date: Aug. 1997
Ending Manufacturing Date: Active

IMPORTANT: THIS IS DATED INFORMATION. When requesting service or replacement parts for your appliance please provide model number and serial number. All parts listed in this manual may be ordered from an authorized dealer.

ITEM	DESCRIPTION	COMMENTS	PART NUMBER	Stocked at Depot
1	Starter Section Assembly		22069B	**Y**
2	Damper Repair Kit		4010-001	
3	Side Smoke Shield		17900	
4	Refractory - Back	Pre 8/91	12589A	
		Post 8/91	16814B	
5	Side Ashlip		12593A	
6	Front Ashlip		12592A	
7	Grate		GR3L	**Y**
8	Lower Front Face	Pre Serial #AK583441	23912	
9	Side Refractory	Pre 8/91	11821A	
		Post 8/91	16757	
10	Smoke Shield		17902	
	Firescreen Assembly	Qty. 3 req.	12624	**Y**
	Screen Handle		4021-150	
	Firescreen Rod	Qty. 3 req.	12332A	**Y**
	Grate Clips	Qty. 2 req.	28062	
	Nailing Flanges	Qty. 4 req.	31190	
	Refractory - Hearth		12590A	
	Refractory Retainer	Qty. 2 req.	11847	
	Standoffs - Top	Qty. 4 req.	11864i	
	Strip Protector	Qty. 3 req.	18320	
	Touch-up Paint		71479	
	Installation Instructions & Owner's Manual		12538	